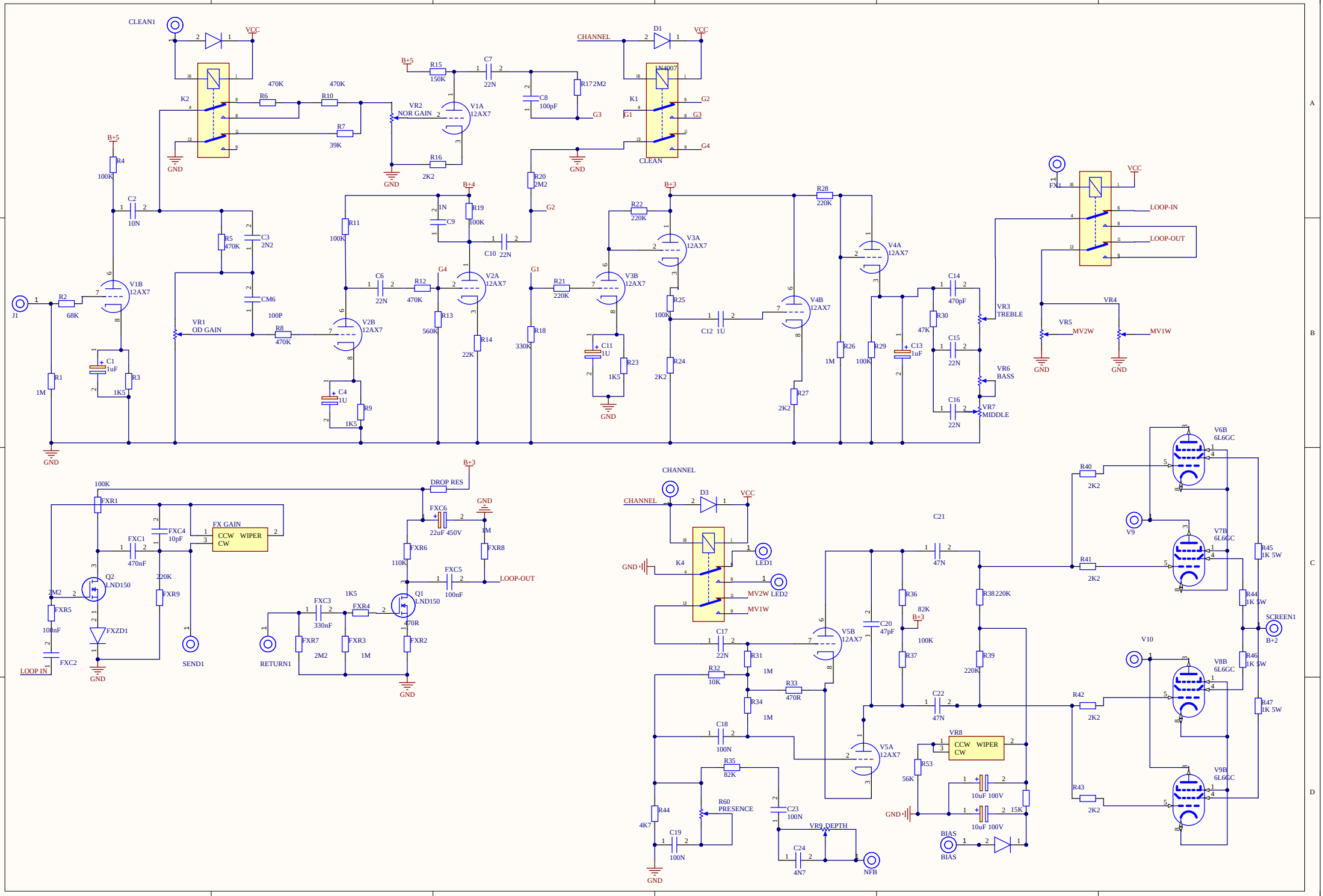
CLEAN1
VCC
D1
1N4007
CHANNEL
K2
K1
CLEAN
B+5
R15
150K
C7
22N
R17 2M2
C8
100pF
R6
470K
R10
470K
R7
39K
VR2
NOR GAIN
V1A
12AX7
R16
2K2
R20
2M2
G1
G2
G3
G4
GND
R4
100K
C2
10N
R5
470K
C3
2N2
CM6
100P
V1B
12AX7
J1
R2
68K
VR1
OD GAIN
R8
470K
R1
1M
C1
1uF
R3
1K5
R11
100K
C6
22N
R12
470K
V2B
12AX7
C4
1U
R9
1K5
B+4
1N
C9
R19
100K
C10 22N
V2A
12AX7
R13
560K
R14
22K
R21
220K
R18
330K
V3B
12AX7
C11
1U
R23
1K5
B+3
R22
220K
V3A
12AX7
R25
100K
C12 1U
R24
2K2
V4B
12AX7
R27
2K2
R28
220K
V4A
12AX7
R26
1M
R29
100K
C13
1uF
C14
470pF
R30
47K
C15
22N
C16
22N
VR3
TREBLE
VR6
BASS
VR7
MIDDLE
FX1
LOOP-IN
LOOP-OUT
VR4
VR5
MV2W
MV1W
DROP RES
FXR1
100K
FXC6
22uF 450V
FXC4
10pF
FXC1
470nF
FX GAIN
CCW WIPER
CW
Q2
LND150
FXR5
100nF
FXZD1
FXC2
LOOP IN
SEND1
FXR9
220K
FXR6
110K
FXR8
1M
FXC5
100nF
LOOP-OUT
Q1
LND150
470R
FXR2
FXR4
1K5
FXC3
330nF
FXR7
2M2
FXR3
1M
RETURN1
D3
K4
LED1
LED2
MV2W
MV1W
C17
22N
R31
1M
R32
10K
R33
470R
R34
1M
C18
100N
R35
82K
R60
PRESENCE
R44
4K7
C19
100N
C23
100N
C24
4N7
VR9 DEPTH
NFB
V5B
12AX7
V5A
12AX7
C20
47pF
C21
47N
R36
82K
R37
100K
R38 220K
R39
220K
C22
47N
VR8
CCW WIPER
CW
R53
56K
10uF 100V
15K
BIAS
V6B
6L6GC
V7B
6L6GC
V8B
6L6GC
V9B
6L6GC
V9
V10
R40
2K2
R41
2K2
R42
2K2
R43
2K2
R45
1K 5W
R44
1K 5W
R46
1K 5W
R47
1K 5W
SCREEN1
B+2

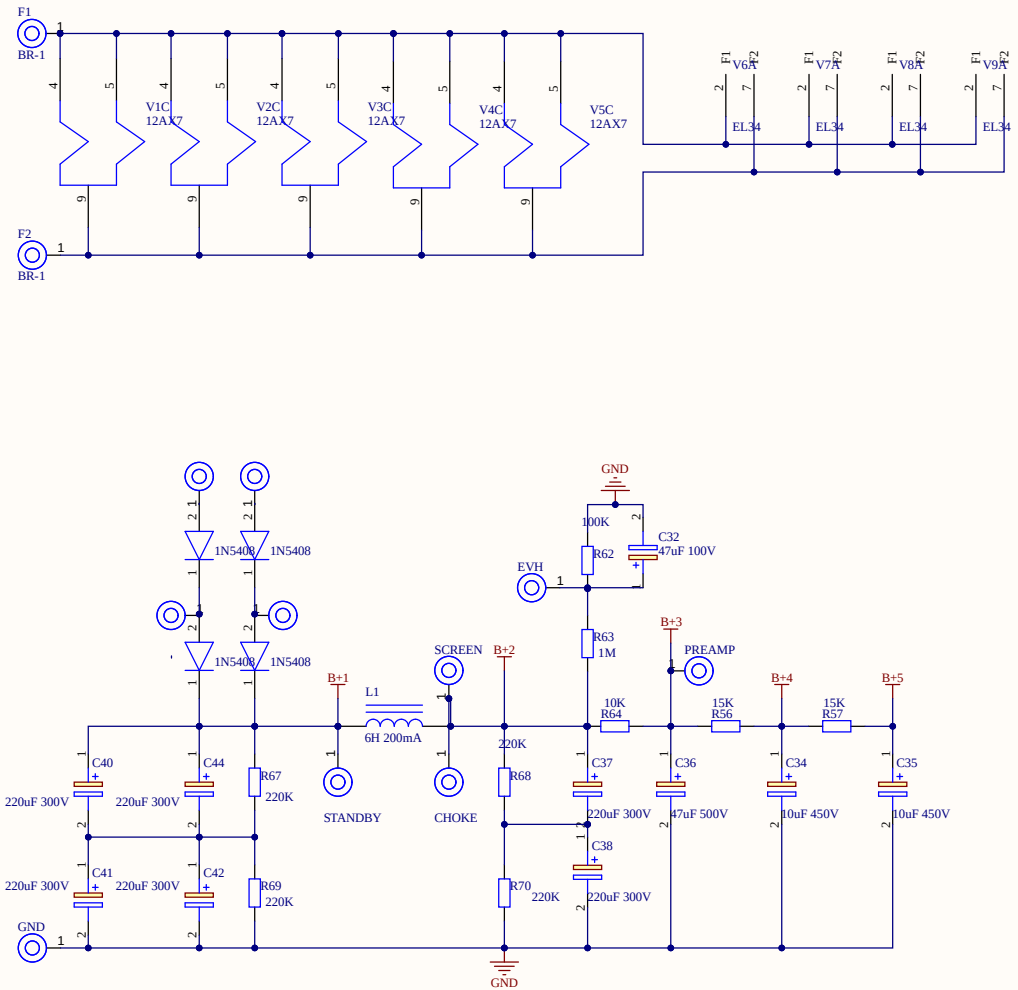

Title		
Size A3	Number	Revision
Date: 6/14/2023		Sheet of
File: C:\Users\..\SLO_NEW_PSU.SchDoc		Drawn By: